Kilohertz linewidth from frequency-stabilized mid-infrared quantum cascade lasers

Richard M. Williams, James F. Kelly, John S. Hartman, and Steven W. Sharpe

Pacific Northwest National Laboratory, MS K5-25, P.O. Box 999, Richland, Washington 99352

Matthew S. Taubman and John L. Hall

JILA, University of Colorado and National Institute of Standards and Technology, Boulder, Colorado 80309-0440

Federico Capasso, Claire Gmachl, Deborah L. Sivco, James N. Baillargeon, and Alfred Y. Cho

Bell Laboratories, Lucent Technologies, 600 Mountain Avenue, Murray Hill, New Jersey 07974

Received July 2, 1999

Frequency stabilization of mid-IR quantum cascade (QC) lasers to the kilohertz level has been accomplished by use of electronic servo techniques. With this active feedback, an 8.5-μm QC distributed-feedback laser is locked to the side of a rovibrational resonance of nitrous oxide (N_2O) at 1176.61 cm^{-1}. A stabilized frequency-noise spectral density of 42 Hz/$\sqrt{\text{Hz}}$ has been measured at 100 kHz; the calculated laser linewidth is 12 kHz.
© 1999 Optical Society of America
OCIS codes: 000.2170, 120.5050, 120.4820, 140.5960, 000.2170.

A series of applications ranging from high-resolution spectroscopy to optical communication networks exist for wavelength-stabilized lasers. The recent advent of the quantum cascade (QC) laser[1,2] emitting in the 4–17-μm range has greatly increased the availability of tunable laser sources for high-resolution spectroscopic applications in the mid-IR spectral region. Here we report the results of what we believe to be the first successful stabilization of a QC laser.

In this Letter we present frequency-stabilization results acquired during electronic feedback control of an 8.5-μm QC distributed-feedback laser.[3] The stabilization scheme is based on a molecular side-locking approach[4,5] utilizing a rovibrational resonance of nitrous oxide (N_2O).[6] The results demonstrate that QC lasers can be used for applications requiring tens of milliwatts of cw output power with stabilized linewidths in the few-kilohertz regime. Nonstabilized QC lasers have been used in mid-IR gas-sensing spectroscopic applications during both continuous[7,8] and pulsed[9] operation.

The wavelength of QC lasers is determined by the energy difference between quantum-well states in the conduction band; therefore one can tailor the wavelength by simply changing the dimensions of the quantum-well structure. Cascaded structures of AlInAs–GaInAs, comprising as many as 75 active regions, are grown by molecular beam epitaxy upon InP substrates. These devices produce much higher optical powers ($\leq$700 mW/facet cw at cryogenic temperatures) than conventional diode lasers operating at similar wavelengths. Side-mode suppression (>30 dB) is achieved by incorporation of a distributed-feedback grating into the ridge-waveguide structure. In this Letter we describe an 8.5-μm QC–distributed-feedback laser[3] mounted in a cryogenic Dewar and held at ~77 K during cw operation.

A schematic representation of this experiment is shown in Fig. 1. A current source has been fabricated based on the design of Libbrecht and Hall that allows for modulation of the QC laser drive current (up to 1 MHz).[10] One can superimpose a waveform upon the dc current to sweep the laser frequency or, as in this case, apply an electronic servo control signal to correct for fluctuations of the laser wavelength.

The IR cw output is split into three portions (Fig. 1). The first (control beam) passes through a cell containing 3–5 Torr of N_2O before being focused onto a 1-mm-diameter HgCdTe photovoltaic detector fitted with a matched transimpedance amplifier with a bandwidth of ~10 MHz. The second (reference beam) is focused onto an identical detector–preamplifier. Finally, the third portion (witness beam) is passed through a second cell containing

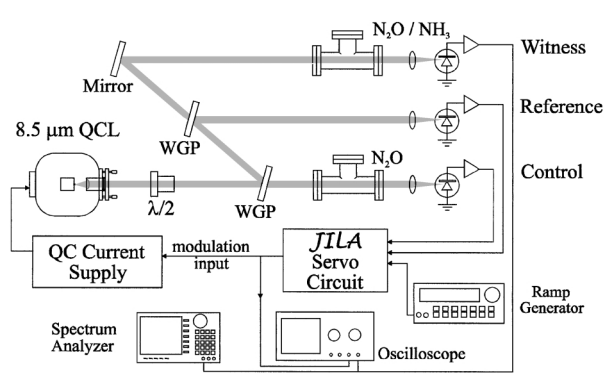

Fig. 1. Schematic representation of the frequency-stabilization scheme based on molecular resonance side locking. WGP's, wire grid polarizers; QCL, quantum cascade laser; $\lambda/2$, half-wave plate.

0146-9592/99/241844-03$15.00/0 © 1999 Optical Society of America

3–5 Torr of either N_2O or ammonia (NH_3) and is focused onto a 2-mm-diameter HgCdTe photovoltaic detector whose preamplifier has an electronic bandwidth of ~700 kHz. The QC laser is operated near 550 mA (150 mA above threshold) and is capable of producing 10 mW of cw optical power under these conditions at 77 K. Owing to intentional misalignment of the laser collimation lens (to reduce optical feedback), the received power on each of the three detectors does not exceed 150 μW. For the results presented here the frequency-lock point is the low-frequency, half-height position of a rovibrational transition of N_2O [0, 0, 0 → 0, 2, 0 (ν_1, ν_2, ν_3); $J = 9 \rightarrow 10$] at 1176.611 cm^{-1}. The nearly Doppler-limited absorption profile (FWHM 66 MHz) has a peak resonant absorbance of 1.5 [absorbance = −ln(transmission)] for the N_2O contained in the 15-cm-long cell. The absolute frequencies of these transitions are inferred by comparison with calculated HITRAN spectra.[11]

Signals are fed from the control and reference detectors to a custom-built servo unit. Before locking, the laser is tuned to the desired locking point by adjustment of the dc laser current. Then the appropriate in-loop signals are processed, producing an error-correction signal that is fed back into the QC laser through the modulation input of the current controller. An out-of-loop witness detector monitors the performance of the stabilization by detecting frequency-to-amplitude variations produced as the laser passes through a gas cell containing either N_2O or NH_3 (with Doppler FWHM of 66 and 106 MHz, respectively). The steep absorption profile of the species transforms the frequency-noise information into measurable intensity fluctuations. A calibration slope for the frequency discriminator, obtained from the Doppler-limited absorption profile (measured and calculated separately), is used to map the measured amplitude variations onto an accurate relative frequency discrimination scale.

QC lasers are expected to exhibit excellent intrinsic frequency stability. As is well known, the linewidth of a diode laser is expected to be degraded with respect to the Schawlow–Townes linewidth formula by the factor $(1 + \alpha^2)$, where the parameter α (commonly referred to as the alpha parameter) accounts for the refractive-index variations generated by population inversion fluctuations.[12] These variations in turn produce laser frequency fluctuations, i.e., phase noise. The corresponding linewidth is increased by the factor $(1 + \alpha^2)$, which can be in the 10–30 range for conventional diode lasers. Because of their unique electronic structure, QC lasers are expected to have an α value near 0.[1] The noise that we experience and suppress by servo control is thought to be the result of carrier and lattice temperature variations, which exhibit an $\sim 1/f^2$ spectrum [with a value of the nonstabilized frequency noise spectrum, $S_\nu(f)$, at 100 kHz of 4×10^4 Hz^2/Hz]. The implication is that the intrinsic laser linewidths of QC devices should be substantially smaller than those of interband diode lasers operating at similar wavelengths.

QC laser frequency fluctuations, which are transformed into measurable intensity variations as seen by the control-beam detector, are proportionally subtracted with a signal obtained in the reference arm of the apparatus (measuring intensity variations), which produces a null error signal. The error signal is applied to a servo unit and produces the necessary correction signal, which is fed back into the modulation input on the QC laser current controller. The performance of the stabilization is measured out of loop in the witness arm of the layout by a third detector, whose output is recorded on either a digital oscilloscope or a rf spectrum analyzer.[13] Figure 2 shows individual time-series signals obtained by this out-of-loop detector.

Figure 3 depicts similar data to those shown in Fig. 2, recorded with a rf spectrum analyzer with a resolution bandwidth of 3 kHz and 10 sweeps averaged. The large feature present in all the traces in Fig. 3 below 20 kHz is an artifact produced by the spectrum analyzer's high-pass input filter. As can be seen from Fig. 3, the active stabilization considerably reduces the

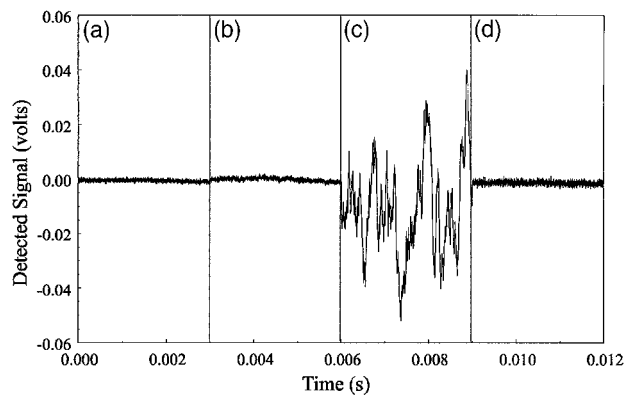

Fig. 2. Relative time-domain signal levels from the witness beam. (a) Detector–preamplifier noise floor, (b) laser intensity fluctuations measured when the QC laser is tuned completely off resonance (thereby setting the frequency-to-amplitude discriminator slope to zero), (c) nonstabilized laser frequency fluctuations, (d) stabilized laser frequency fluctuations. The vertical scale is identical for (a)–(d).

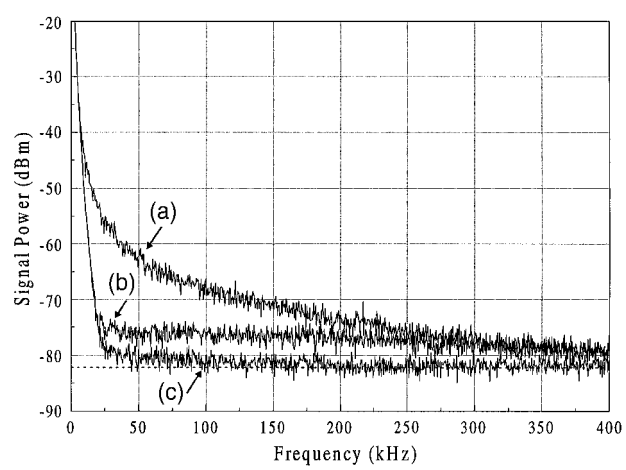

Fig. 3. Comparison of spectral noise data of the witness beam obtained with a rf spectrum analyzer (resolution bandwidth 3 kHz): (a) nonstabilized laser, (b) stabilized laser, (c) laser intensity noise. The dashed line represents the detector–preamplifier noise floor.

frequency noise of the QC laser at frequencies of up to ~250 kHz.

A separate measurement of the in-loop control signal reveals the unity gain point of the servo system, occurring at 450 kHz, with a servo gain of 23 dB occurring at 100 kHz. Additionally, separate in-loop measurements indicate that the stabilized system is performing within 3 dB of the control detector–preamplifier noise floor. As with any servo-control system, the random noise of the control signal will ultimately limit the achievable performance by adding its noise to the measurable error signal, producing a 3-dB increase in the power spectrum for matched channels.

Using the appropriate calibration value for the frequency-to-amplitude discriminator slope, we can assign a spectral noise density value of 42 $\mathrm{Hz}/\sqrt{\mathrm{Hz}}$ to laser-locked trace (b) in Fig. 3 over a frequency region of 250 kHz. In the limit of fast frequency fluctuations, which are smaller than the measurement resolution bandwidth, this spectral noise density over the given frequency range gives an effective Lorentzian linewidth (FWHM) of 12 kHz. A full discussion of this is omitted for brevity but is given by Elliot *et al.*[14] and Zhu and Hall.[15]

Frequency stabilization of an 8.5-μm QC laser has been demonstrated with excellent results, suggesting the opportunity for high-resolution mid-IR spectroscopy. Other applications, including chemical remote or point sensing, IR optical communication links, and passive rf heterodyne radiometry, may be realized with high-power, low-frequency-noise QC lasers.

The noise floor of the in-loop detector–preamplifier represents the present limiting factor for additional stabilization, as its technical and quantum noise are encoded into the laser's output. Further improvement of the detector–preamplifier combination can be achieved with cold bandpass filters and detectors with greater sensitivity and much lower leakage current (i.e., higher R_0A values). Additional improvements to the servo will also be implemented, allowing for additional noise reduction, with the added benefits of locked and scanning capabilities.

In the future we will concentrate on Pound–Drever–Hall frequency-modulation stabilization.[15–17] We have successfully implemented this technique for locking to the center of a spectral resonance, which will be discussed in the future.

Pacific Northwest National Laboratory (PNNL) is operated for the U.S. Department of Energy (DOE) by Battelle Memorial Institute under contract DE-AC06-76RLO 1830. The work at PNNL was performed with DOE funding. The work at Bell Laboratories was partially funded by Defense Advanced Research Projects Agency contract DAAG55-98-C-0050. R. M. Williams's e-mail address is richard.williams@pnl.gov.

References

1. J. Faist, F. Capasso, D. L. Sivco, C. Sirtori, A. L. Hutchinson, and A. Y. Cho, Science **264,** 553 (1994).
2. F. Capasso, C. Gmachl, D. Sivco, and A. H. Cho, Phys. World **12**(6), 27 (1999).
3. C. Gmachl, F. Capasso, J. Faist, A. L. Hutchinson, A. Tredicucci, D. Sivco, J. N. Baillargeon, S. N. G. Chu, and A. Y. Cho, Appl. Phys. Lett. **72,** 1430 (1998).
4. S. L. Gilbert, Opt. Lett. **16,** 150 (1991).
5. P. Laporta, S. Taccheo, S. Longhi, C. Svelto, and P. De Natale, Appl. Phys. Lett. **71,** 2731 (1997).
6. Side locking was used in this instance to demonstrate the ease of locking the QC laser with a simple technique. Pound–Drever–Hall modulation was also used, yielding similar results but over less bandwidth owing to some extra time delays. Frequency-modulated saturated absorption locking experiments are clearly the next stage for QC stabilization.
7. S. W. Sharpe, J. F. Kelly, J. S. Hartman, C. Gmachl, F. Capasso, D. L. Sivco, J. N. Baillargeon, and A. Y. Cho, Opt. Lett. **23,** 1396 (1998).
8. B. A. Paldus, T. G. Spence, R. N. Zare, J. Oomens, F. J. M. Harren, D. H. Parker, C. G. Gmachl, F. Capasso, J. N. Sivco, J. N. Baillargeon, A. L. Hutchinson, and A. Y. Cho, Opt. Lett. **24,** 178 (1999).
9. K. Namjou, S. Cai, E. A. Whittaker, J. Faist, C. Gmachl, F. Capasso, D. L. Sivco, and A. Y. Cho, Opt. Lett. **23,** 219 (1998).
10. K. G. Libbrecht and J. L. Hall, Rev. Sci. Instrum. **64,** 2133 (1993).
11. L. S. Rothman, R. R. Gamache, R. H. Tipping, C. P. Rinsland, and M. A. H. Smith, J. Quant. Spectrosc. Radiat. Transfer **48,** 469 (1992).
12. A. Yariv, *Quantum Electronics*, 3rd ed. (Wiley, New York, 1989).
13. Unlike the control–reference signal subtraction, the witness signal was measured directly. It was found unnecessary to subtract the reference signal here, as the impact of the amplitude noise was found to be negligible compared with the detector–preamplifier noise floor, as can be seen from Fig. 3.
14. D. S. Elliott, R. Rajarshi, and S. J. Smith, Phys. Rev. A **26,** 12 (1982).
15. M. Zhu and J. L. Hall, J. Opt. Soc. Am. B **10,** 802 (1993).
16. R. V. Pound, Rev. Sci. Instrum. **17,** 490 (1946).
17. R. W. P. Drever, J. L. Hall, F. V. Kowalski, J. Hough, G. M. Ford, A. J. Munley, and H. Ward, Appl. Phys. B **31,** 97 (1983).